XERO
TECHNOLOGY
INFRASTRUCTURE

XTI | 4.0 Recessed
(WF) Wide Flange | (HO) High Output

IK11 | IP66

Metric | 146 x 110mm
Imperial | 5.74" x 4.33"



INACTIVE PRODUCTS

THIS IS A INACTIVE PRODUCT

Thank you for considering this inactive product. Please note that this product may require a longer lead time and a minimum order quantity.
For more detailed information on this profile, we recommend speaking with your local Xero Specification Consultant.
Visit xerolighting.com/contact for further assistance.

ADVANCED
INDUSTRY BEST
10 YEAR
WARRANTY

Version 2 | 13 Aug 2024

XERO
TECHNOLOGY
INFRASTRUCTURE

XTI | 4.0 Recessed
(WF) Wide Flange | (HO) High Output

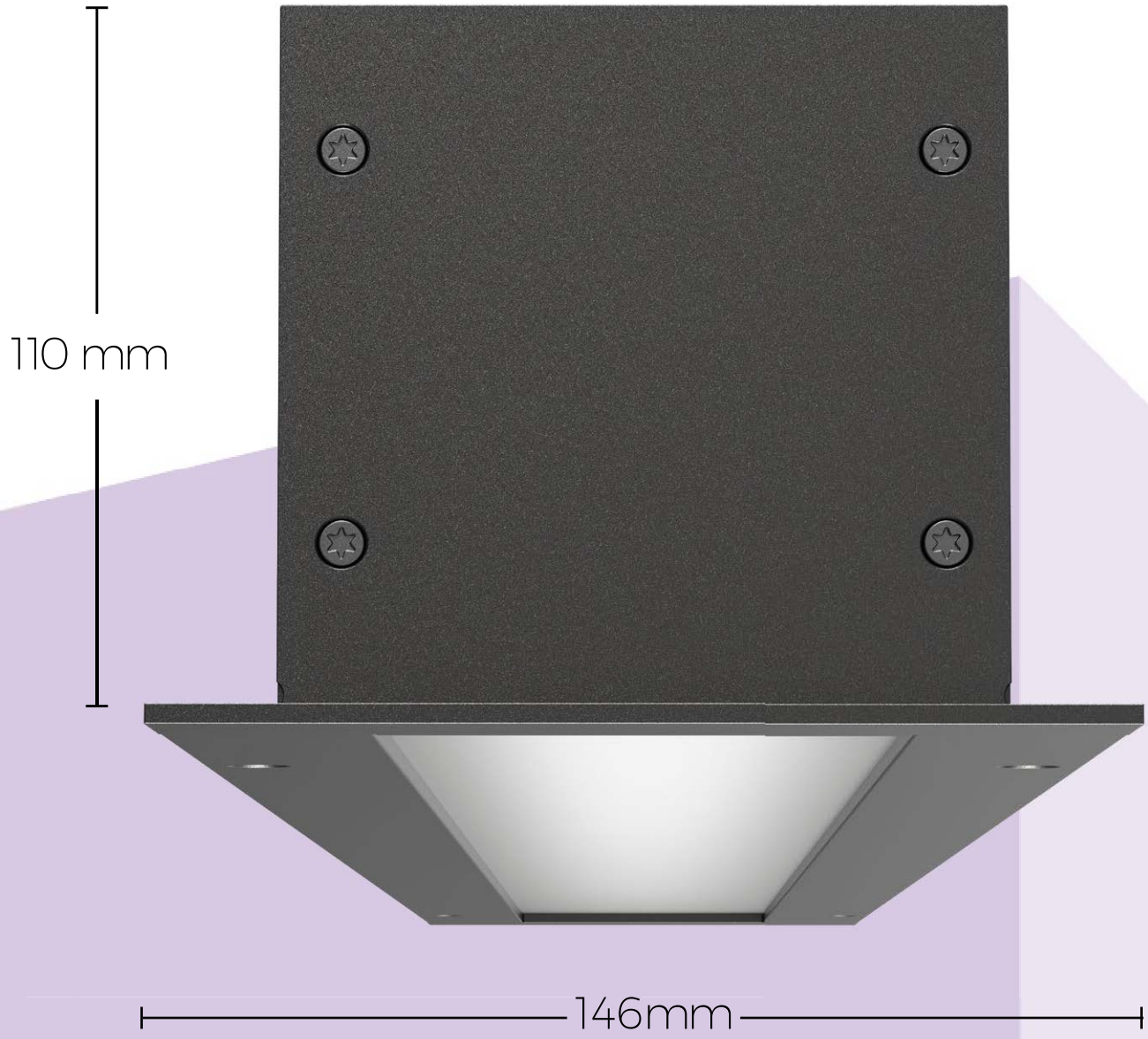

XERO TECHNOLOGY INFRASTRUCTURE

XTI | 4.0 Recessed (WF) Wide Flange | (HO) High Output

DATA TABLE

Output	4 Ft Length 1120mm	Luminous Flux (Delivered Lumens)	LO 4300	HO 8000	
	Xeramix	CRI:	80+		
		Lumen Maintenance:	114,000 Hours (L90 B10 @ 50°) IM hours (L70 B10 @50°C)		
	Proformax RGBW	CRI:	80+		
		Lumen Maintenance:	82,000 Hours (L80 B10 @ 25°)		
Warranty	Xeramix		Xeramix I = 10 years Xeramix R = 15 Years		
	Proformax		7 years		
Electrical	Power Consumption		Between 40 and 90w/m		
	Voltage input range		120 - 277V		
	Control methods		Dimming options for white light: 0-10V, DALI, DMX Optional RGB / Sunset Diming control DMX or DALI XI		
	Total harmonic distortion THD		9.8% max		
	Approvals		UL / CE / CCC / AS:NZS / EMC		
Physical	Dimensions		146mm Wide x 110mm High (5.74"x 4.3")		
	Weight per metre		5.97Kg (13.16lbs) average weight		
	Housing		Aluminium Extrusion with silver powder-coat or other powder-coated finishes		
	Diffuser		Polycarbonate Opal Diffuser/ Clear Polycarbonate Diffuser		
	Connections		Optional polarised electrical connection between sections		
	Compatible ceiling type		Suitable for drywall ceilings, metal pan, concrete, timber and T bar grid ceilings		
	Mounting		Field adjustable Rollerball Wire Suspensions / Surface Mounting / Custom Mounting / Rod Suspension / Wall Mounting		
	Joiner options		90° / Straight / 180° / Custom		
	Operating temperatures		Xeramix -25°C to 50°C (-13°F to 140°F) Proformax RGBW -25°C to 35°C (-13°F to 95°F)		
	Environment		Luminaire IP66 (Not in direct sunlight, diffuser must not face upwards).		
	IK rating		IK11		
	Minimum length adjustment		Xeramix = 25mm		
	LED Board types		Xeramix I and Xeramix R boards and drivers in 25mm compatible / 100mm 280mm / and 560mm Zhaga compatible Proformax RGBW in 50 / 100 / 280mm lengths Zhaga compatible		
	Vandal Proof		Available with Anti-Vandal Fasteners		
	Optional Extras		Lanyards / Emergency packs / Camera / Environmental Plugs / Thermal throttle / IOT connectivity		

XERO
TECHNOLOGY
INFRASTRUCTURE

XTI | 4.0 Recessed
(WF) Wide Flange | (HO) High Output

XTI Available Lengths (not including flanges)



DESCRIPTION	LENGTHS										
total luminaire length in mm	578	858	1138	1418	1698	1978	2258	2538	2818	3098	3378
total luminaire length in inches	23	34	45	56	67	78	89	99	111	122	133
'560 board multiples	1.0	1.5	2.0	2.5	2.0	3.5	4.0	4.5	4.5	5.5	6.0

XERO TECHNOLOGY INFRASTRUCTURE

XTI | 4.0 Recessed
(WF) Wide Flange | (HO) High Output

EXAMPLE OF STANDARD LENGTH COMBINATION (not including flanges)

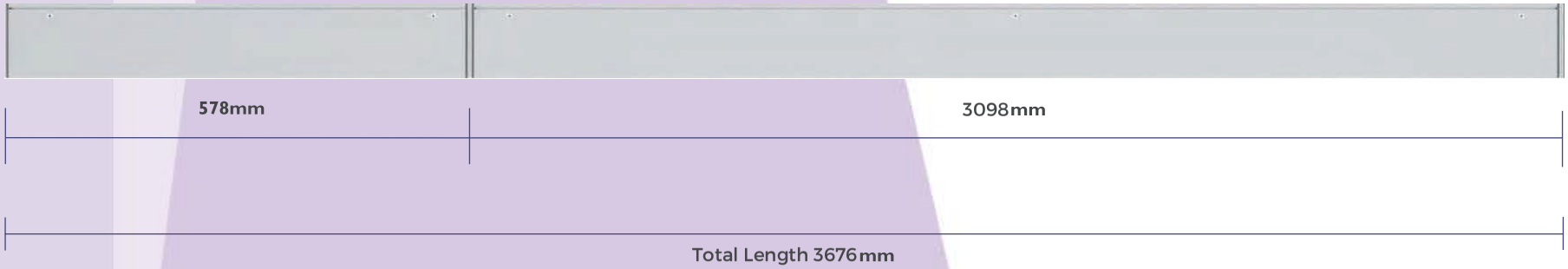

CREATING LENGTHS WITH XTI | 4.0 Recessed (WF) (HO) IP66 IK11

The XTI | 4.0 IP66 IK11+ set lengths can be coupled together in any combination to achieve the desired length.

Note: custom lengths are also available – please consult your local Xero office for information

The XTI | 4.0 IP66 IK11 set lengths can be coupled together in any combination to achieve the desired length.

CUSTOM LENGTHS

Custom lengths are available in 0.984" (25mm) increments

XERO TECHNOLOGY INFRASTRUCTURE

XTI | 4.0 Recessed (WF) Wide Flange | (HO) High Output

Optical control

XTI profiles come with many diffuser options for glare control in any application

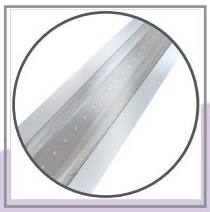

Clear Polycarbonate

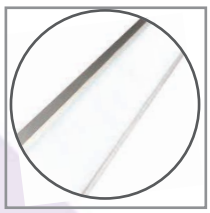

Opal Polycarbonate



Vandal proof option



EWIS speaker option



LED downlight



Spitfire emergency



Sensors / daylight harvesting



Emergency packs