XERO
TECHNOLOGY
INFRASTRUCTURE

XTI | OPTIK WF Recessed (Wide Flange)

IK11 | IP66

Metric | 78 x 87mm
Imperial | 3.07"x 3.42"

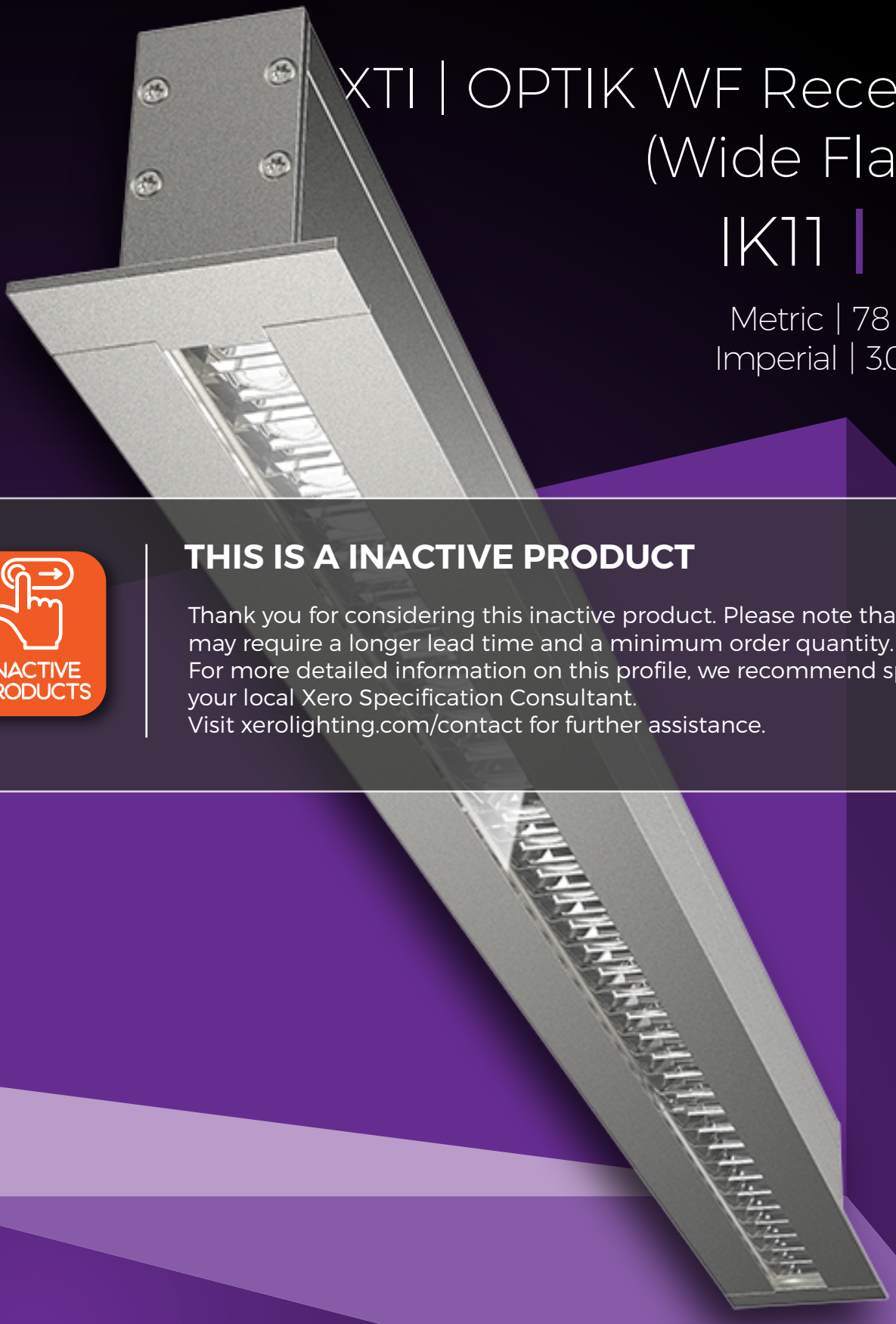

INACTIVE PRODUCTS

THIS IS A INACTIVE PRODUCT

Thank you for considering this inactive product. Please note that this product may require a longer lead time and a minimum order quantity.
For more detailed information on this profile, we recommend speaking with your local Xero Specification Consultant.
Visit xerolighting.com/contact for further assistance.

ADVANCED
INDUSTRY BEST
10 YEAR
WARRANTY

version 2 12.08.24

XERO
TECHNOLOGY
INFRASTRUCTURE

XTI | 1.5 OPTIK WF Recessed (Wide Flange) IP66 | IK11

Output	**4ft Length 1120mm**	**Luminous Flux (Delivered Lumens)**	**LO 1900**	**HO 3500**	
	CRI		80+		
	Lumen Maintenance		114,000 hours [L90 B10 @ 50°C] 1M hours [L70 B10 @ 50°C]		
Warranty			Xeramix 1 10 years		
Electrical	Power Consumption		Between 20 and 45w/m		
	Voltage input range		120 – 277V		
	Control methods		Dimming options for white light: 0-10V, DALI Dimming control: DALI		
	Total harmonic distortion THD		9.8% max		
	Approvals		UL / CE / CCC / AS:NZS / EMC		
Physical	Dimensions		78mm (3.07") Wide x 87mm (3.42") High		
	Weight per metre		3.65Kg (8.04lbs) average weight		
	Housing		Aluminium Extrusion with standard silver powder-coat, black or white textured, (or) optional selected powder-coated finish		
	Diffuser		Polycarbonate Diffuser/ Clear Polycarbonate Diffuser / Internal anti-glare baffle		
	Connections		Optional polarised electrical connection between sections		
	Compatible ceiling type		Suitable for drywall ceilings, metal pan, concrete, timber and T bar grid ceilings		
	Mounting		Recessed Flange Mounted, Sliding Thread Stud Bracket, Sliding Surface Mounting Plate, Wire Suspension Kit		
	Joiner options		90° / Straight / Custom		
	Operating temperatures		Xeramix -25°C to 50°C (-13°F to 140°F)		
	Environment		Luminaire IP66 (not in direct sunlight) (diffuser must not face upwards)		
	Minimum length adjustment		Xeramix = 1mm (with cover plates) / (using OPTIK only = 287mm)		
	LED board types		Xeramix 1 boards 287 mm Zhag a compatible		
	IK rating		IK11		
	Vandal proof		Available with anti-vandal fasteners		
	Optional extras		Lanyards / Emergency packs / Environmental Plugs /Thermal throttle / IOT connectivity		
	Optic Beam Angles		Optic distributions available in Oval Beam Wall Washer, 18° Spot Beam, 28° Medium Beam, 52° Asymmetric Wide Beam, 64° Wide Beam, and 60° Batwing Beam		

XERO
TECHNOLOGY
INFRASTRUCTURE

XTI | 1.5 OPTIK WF Reccesed (Wide Flange) IP66 | IK11

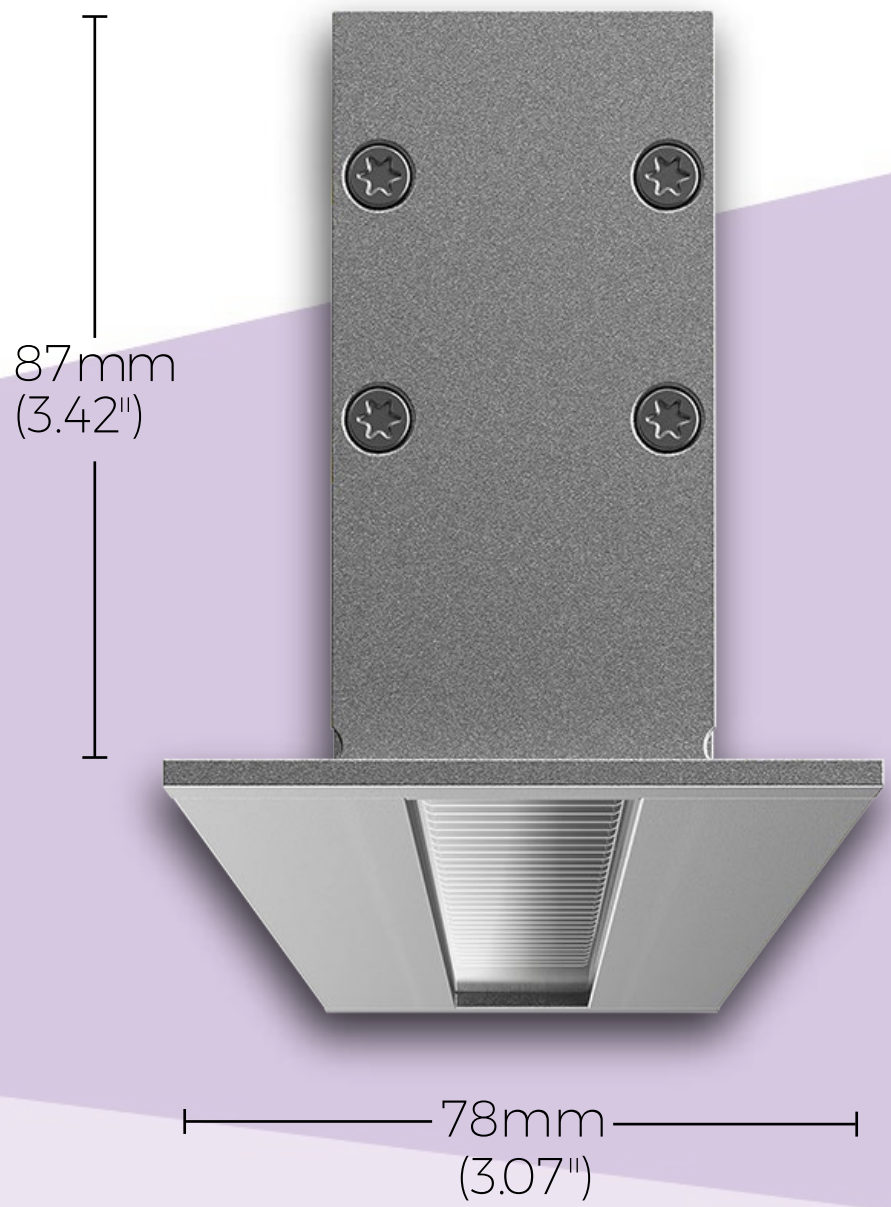

XERO
TECHNOLOGY
INFRASTRUCTURE

XTI | 1.5 OPTIK WF Reccesed
IP66 | IK11

XTI AVAILABLE LENGTHS

Minimum length is 300mm. Maximum length 3,172mm (124.88")
To increase length, a 287mm increment is required as per examples below.

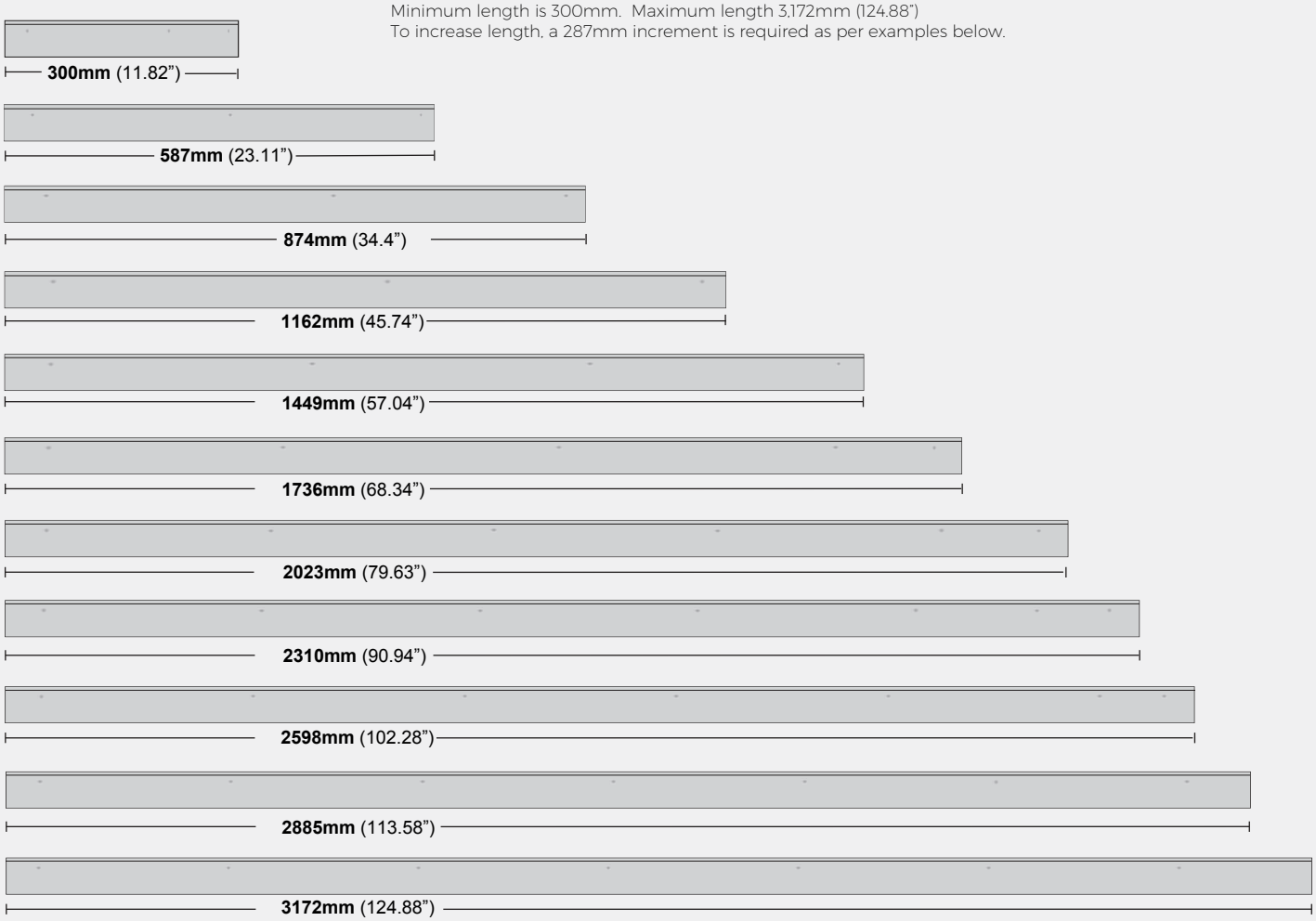



Single

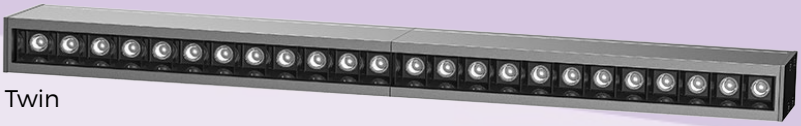

Twin



Triple

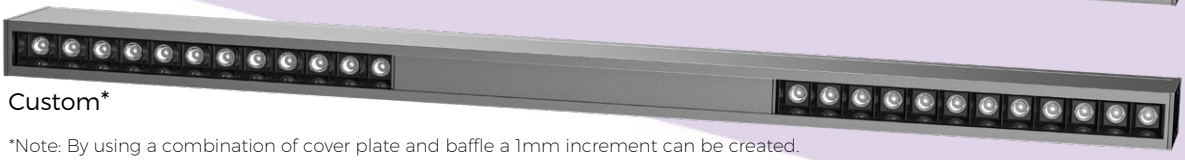

Custom*

*Note: By using a combination of cover plate and baffle a 1mm increment can be created.
Talk with you local Xero Specification Consultant for your custom design options.
xerolighting.com/contact

XERO
TECHNOLOGY
INFRASTRUCTURE

XTI | 1.5 OPTIK WF Recessed (Wide Flange)
IP66 | IK11

SOME EXAMPLES OF STANDARD LENGTH COMBINATION

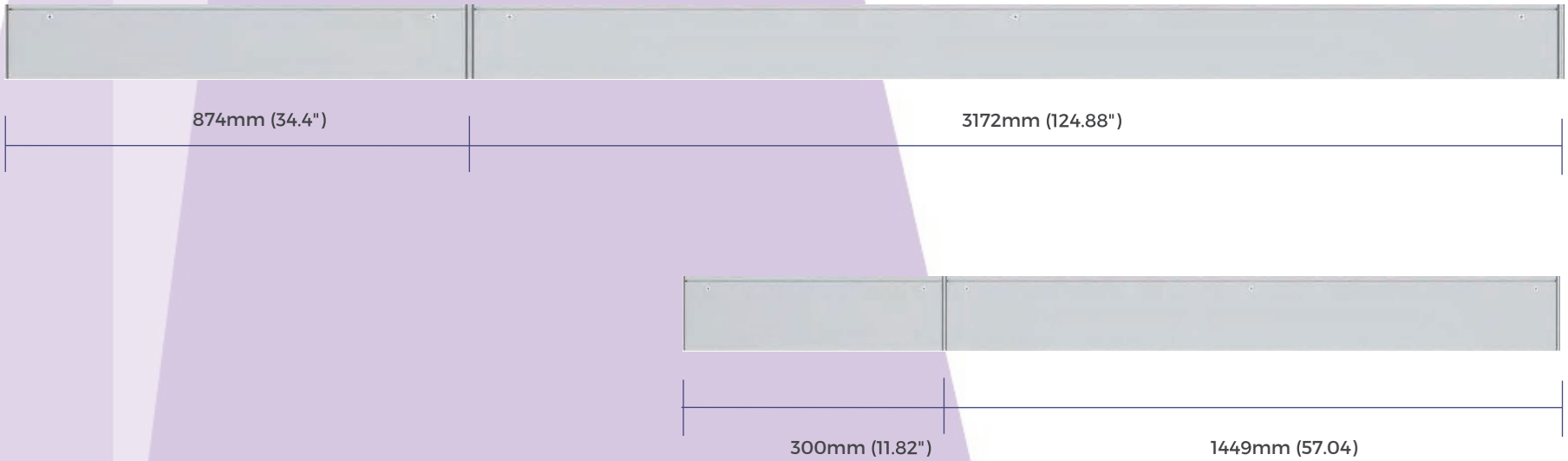

CREATING LENGTHS WITH XTI | 1.5 Series IP66 IK11

The XTI | 1.5 IP66 IK11 set lengths can be coupled together in any combination to achieve the desired length.

Note: custom lengths are also available – please consult your local Xero office for information

The XTI | 1.5 IP66 IK11 set lengths can be coupled together in any combination to achieve the desired length.

CUSTOM LENGTHS

Custom lengths are available in 0.984" (25mm) increments

XERO
TECHNOLOGY
INFRASTRUCTURE

XTI|1.5 OPTIK WF Recessed (Wide Flange) IP66 | IK11

Optical control

Optic lens beam options



diffuser option

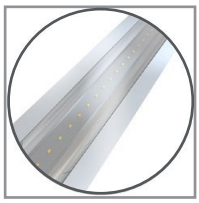

Clear
Polycarbonate

Accessories

Vandal proof
option

XERO
TECHNOLOGY
INFRASTRUCTURE

XTI | 1.5 OPTIK WF Recessed (Wide Flange)
IP66 | IK11

OPTIK profile configurations



Continuous Optic Modules

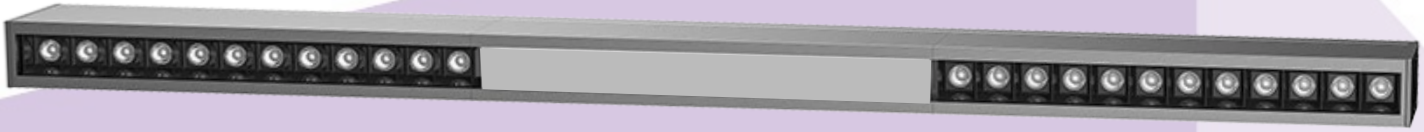

Optic modules with ‘blank cover’ in between.

XERO
TECHNOLOGY
INFRASTRUCTURE

XTI | 1.5 WF Recessed
IP66 | IK11

Individually selectable optics

The OPTIK module lenses come as standard with one variant lens per each module of 12. Although each lens can be individually configured and customised to suit your desired light configuration.

Optic lens options

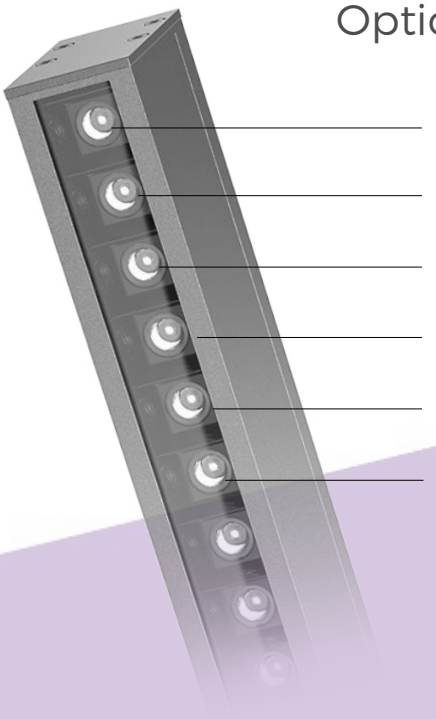

- 18° spot beam
- 28° medium beam
- 52° asymmetric wide beam
- 60° batwing beam
- 64° wide beam
- oval beam wallwasher

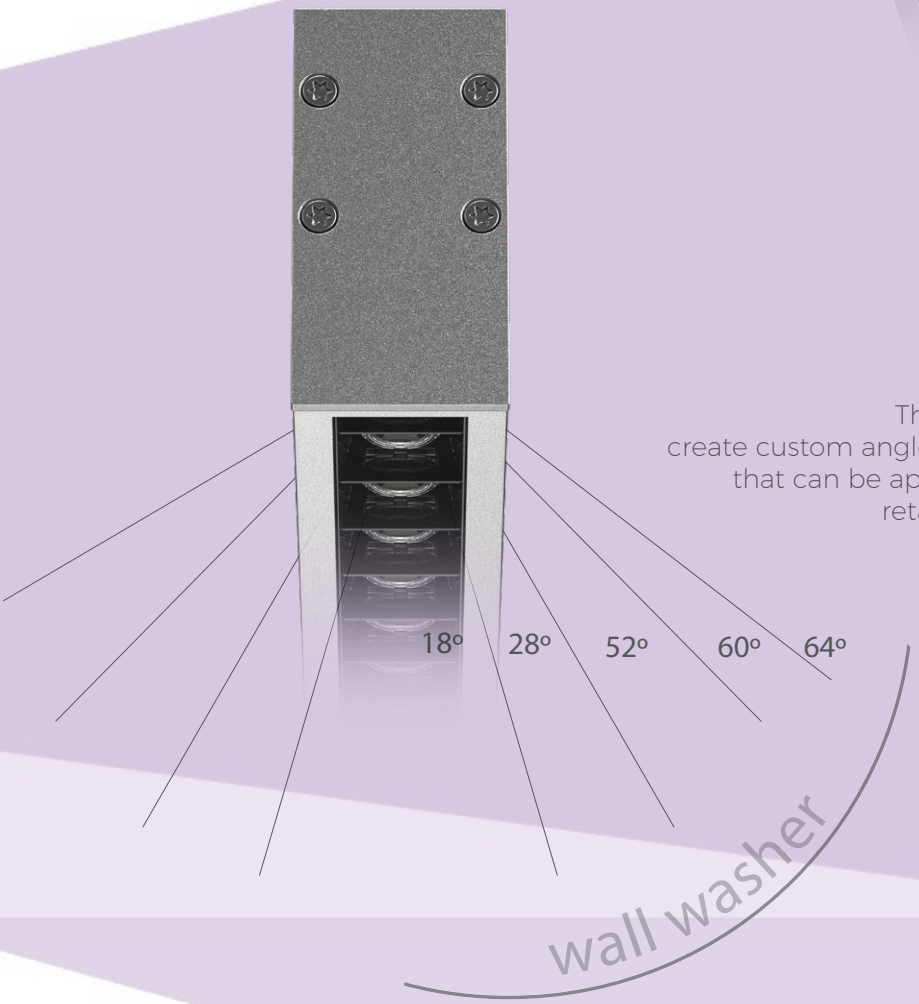

Beam angles

The OPTIK profile gives you the ability to create custom angles to suit specific design requirements that can be applied to various applications including retail, office and residential environments

XERO
TECHNOLOGY
INFRASTRUCTURE

XTI | 1.5 WF Recessed
IP66 | IK11

Dimensions of baffle

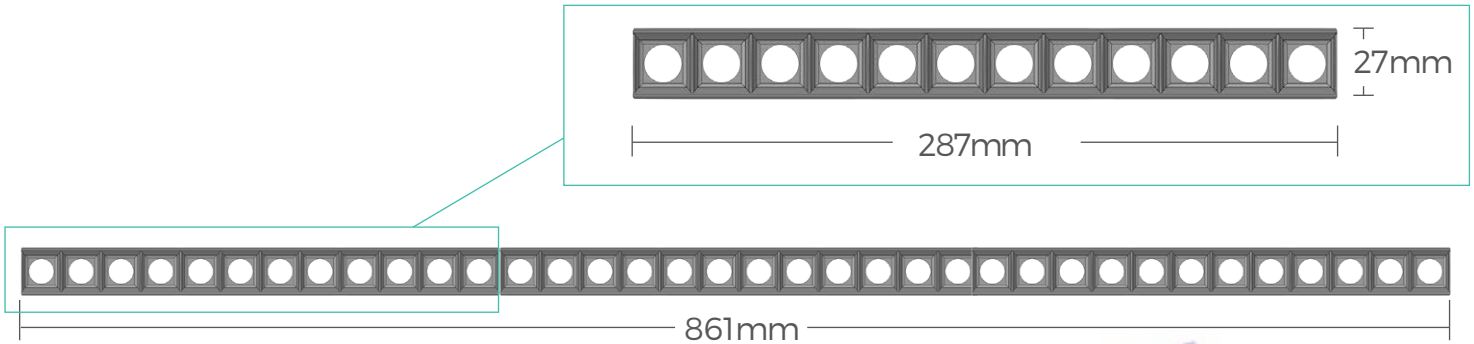

The OPTIK baffle can be arranged in a maximum of three modules

bend options



optics

The XTI 1.5 profile come with many diffuser options for glare control in any application

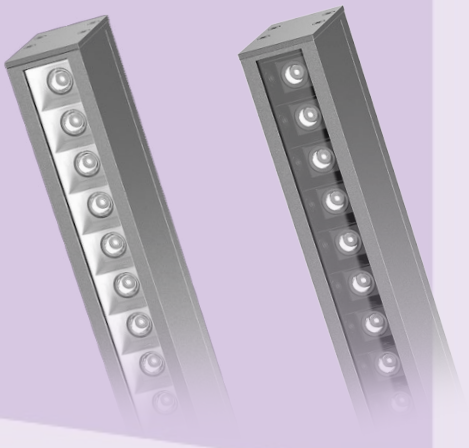

White baffle Black baffle