XERO
Linear Lighting Systems

IP55

XTA | 2.0 Loop Slot

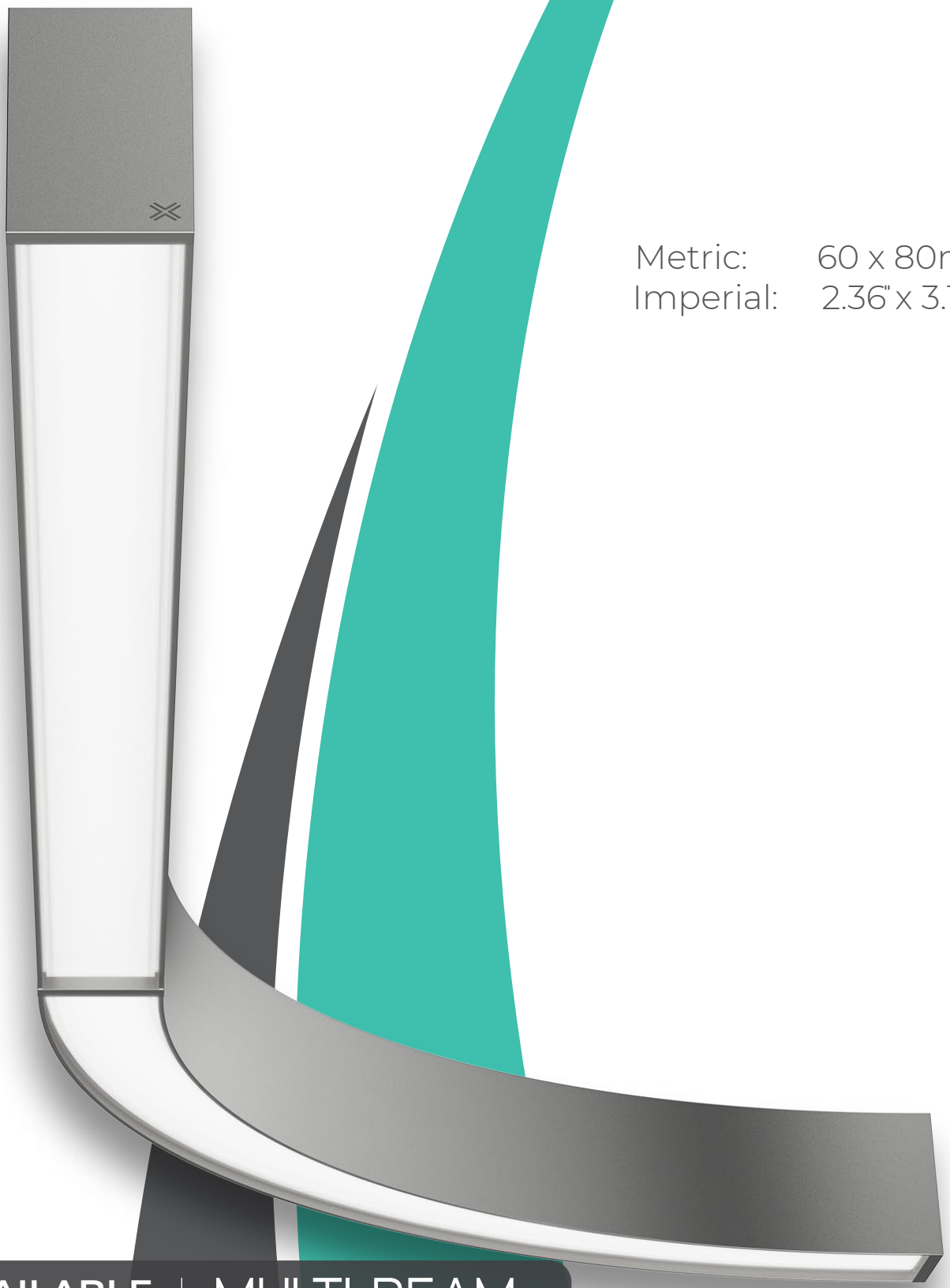

Metric: 60 x 80mm
Imperial: 2.36" x 3.15"

AVAILABLE WITH OPTIONAL

MULTI-BEAM OPTIK
optical control downlights

STANDARD QUALITY ASSURED 7 YEAR WARRANTY

ADVANCED INDUSTRY BEST 10 YEAR WARRANTY

DATA TABLE

Optic Module LED Engine	**4ft Length 1120mm**	**Luminous Flux (Delivered Lumens)**	**LO 1900**	**HO 3500**	
	Xeramix	CRI	80+		
		Lumen Maintenance:	114,000 Hours (L90 B10 @ 50°)		
	Proformax Proformax S	CRI	90+		
		Lumen Maintenance:	82,000 Hours (L80 B10 @ 35°)		
	24V RGBW System		Dual Row (DALI / DMX Dimming)		
Warranty	Xeramix		10 years		
	Proformax / Proformax S		7 years		
	24V RGBW		3 years		
Electrical	Power Consumption		Between 20 and 45w/m		
	Voltage input range		120 – 277V		
	Controls		0-10 volts / Dali Control Gear / DSI compatible / DMX / Dimmer switch / Constant light output / Motion sensor / Ripple free / Bluetooth mesh / Casambi control wireless system / Dimming options for RGBW; DALI, DMX		
	Total harmonic distortion THD		9.8% max		
	Approvals		UL / CE / CCC / AS:NZS / EMC		
Physical	Dimensions		60 x 80mm		
	Weight per metre		4.0kg (8.8lbs) average weight		
	Housing		Aluminium Extrusion with: Standard – silver powder-coat, black or white textured, (or) optional selected powder-coated finish		
	Diffuser		Frosted acrylic lens / Polycarbonate lens / Multi-Beam OPTIK Downlight available in 10° / 18° Spot Beams, 30° Medium Beam, 40° / 50° / 60° Wide Beams		
	Accessories		Various connection shapes available		
	Connections		Speed connect joining system with polarised electrical connection between sections		
	Compatible ceiling type		Suitable for gyprock (drywall) ceilings, metal pan, concrete, timber and T-bar grid ceilings		
	Mounting		Field adjustable rollerball wire suspensions / rod suspensions / wall mounting / surface mount		
	Bend Radii		430R / 830R / 1230R as standard with custom radii available (No unlit)		
	Joiner options		Lit corner 90°/ Cross 90°/ Tee 90°/ straight 180° join		
	Endplate Options		Conseal flat or optional curved end plates		
	Operating temperatures		Xeramix = -25°C to 50°C (-13°F to 140°F) 24V RGBW – (20°C to 35°C) Proformax = -25°C to 35°C (-13°F to 95°F) Proformax S = -25°C to 35°C (-13°F to 95°F)		
	Environment		(IP20) – Dry indoor applications only | (IP55) – Not in direct sunlight		
	Minimum length adjustment		Xeramix = 1mm, Proformax = 25mm, Proformax S = 140mm		
	LED Board types		Xeramix LED boards in 25mm / 100mm / 280mm / 560mm lengths Zhaga compatible Proformax LED boards in 50mm / 280mm / 560mm lengths Zhaga compatible Proformax S LED boards in 140mm / 280mm / 560mm lengths Zhaga compatible		
	Configurations		Down only		

XERO Linear Lighting Systems

XERO TECHNOLOGY ADVANCED XTA

XTA | 2.0 LOOP Slot

indoor series IP55

Optical control

All XTA profiles come with many diffuser options for glare control in any application



*Multi-Beam Downlight



Polycarbonate
(Straights only)



Plexiglass

MULTI-BEAM OPTIK
optical control downlights

*Beam Angles

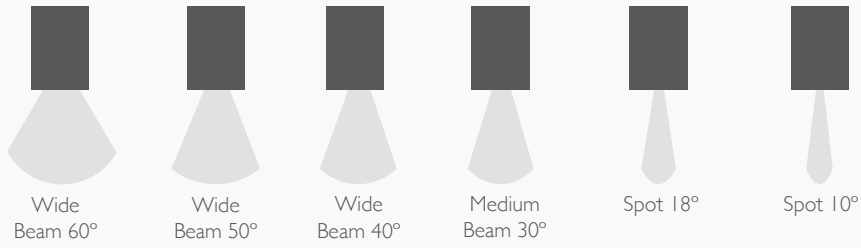

Accessories and Options

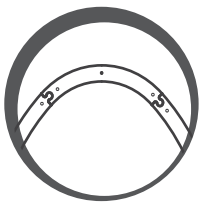

Loop Templates



XM3 Canopy Kit



sensors / daylight harvesting



emergency packs

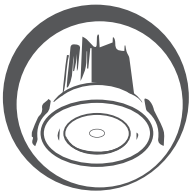

downlights

XTA 2.0 LOOP Slot IP55

Standard Bend Options

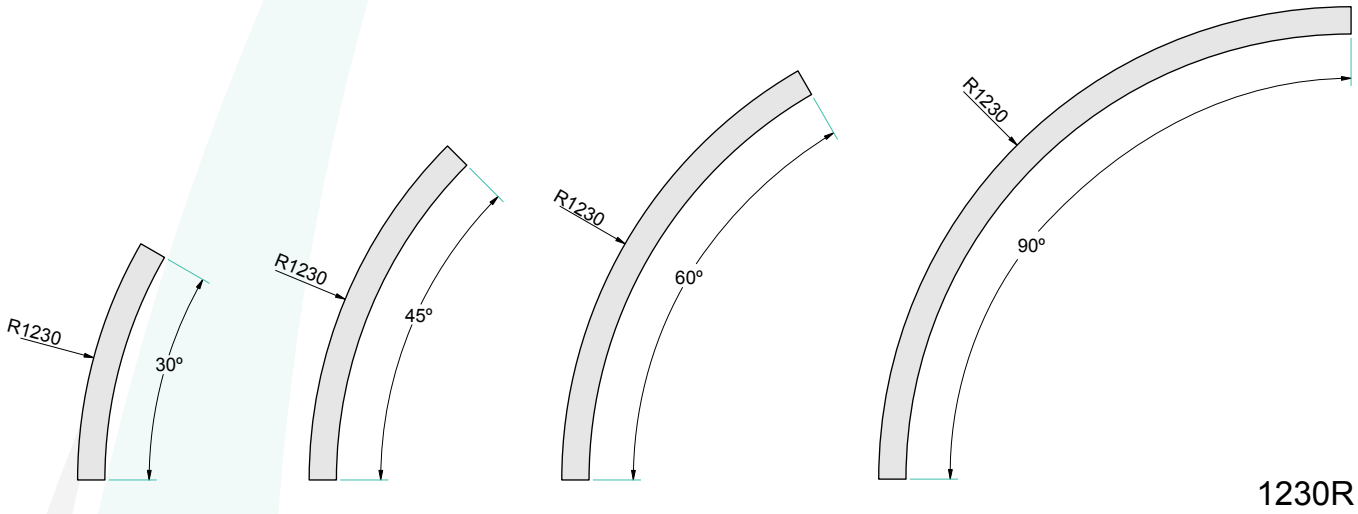

1230R

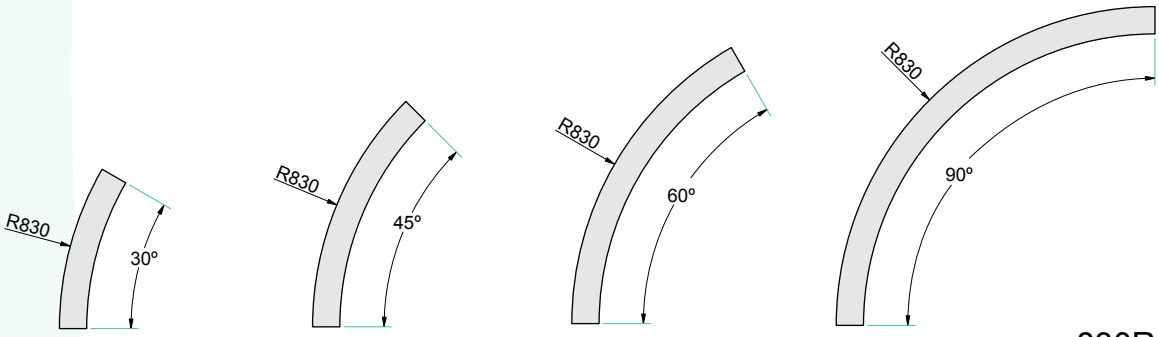

830R

*Other custom radii available on request

All radii bends can have integral drivers provided they ajoin a straight section or are ≥ 1230R

XTA 2.0 LOOP Slot IP55

Standard Arc Options

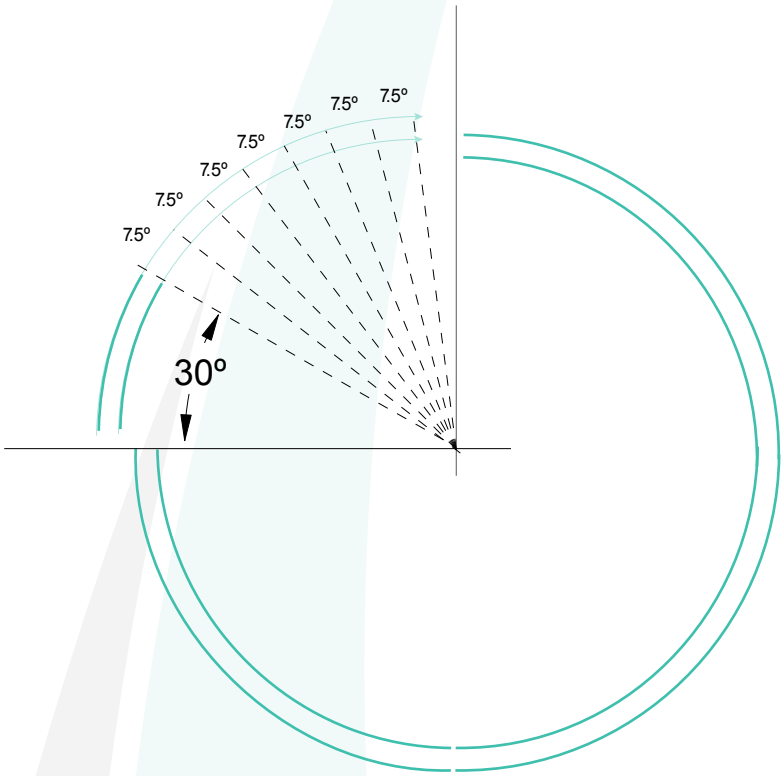

Minimum 30° segment
then each segment can be
increased in 7.5° increments
Arc segments below
1230R have remote drivers

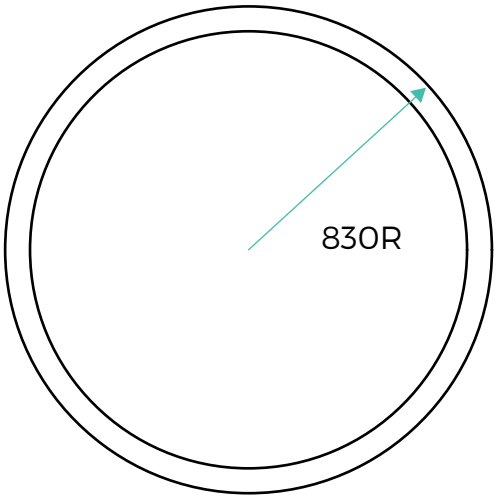

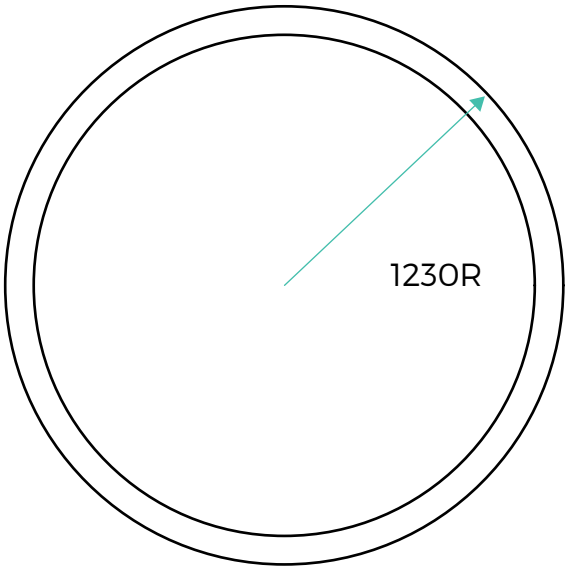

Other options available on request

XTA | 2.0 Loop Slot IP55

Some examples of Shapes and Sizes

The LOOP series has the ability to form myriad of shapes and sizes from simple curved corners to the most complex configuration only limited by your imagination.

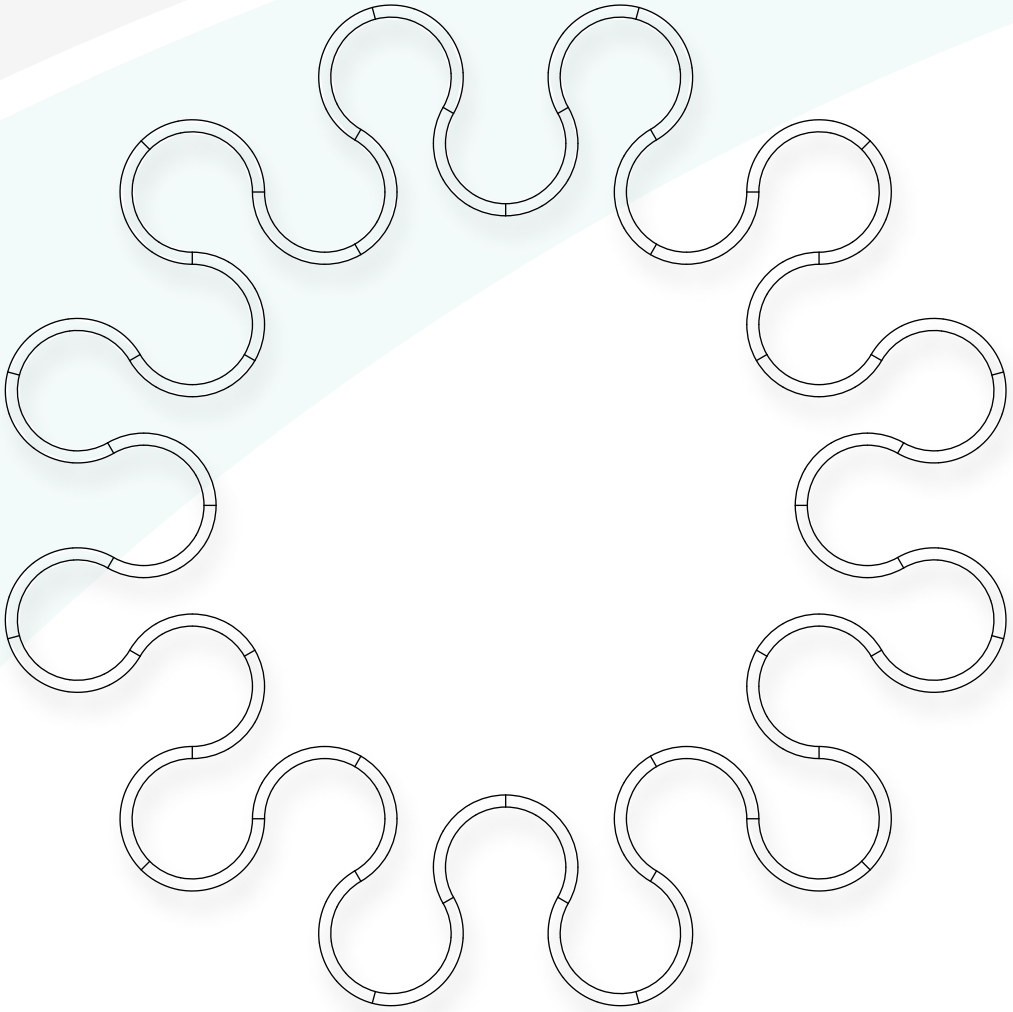

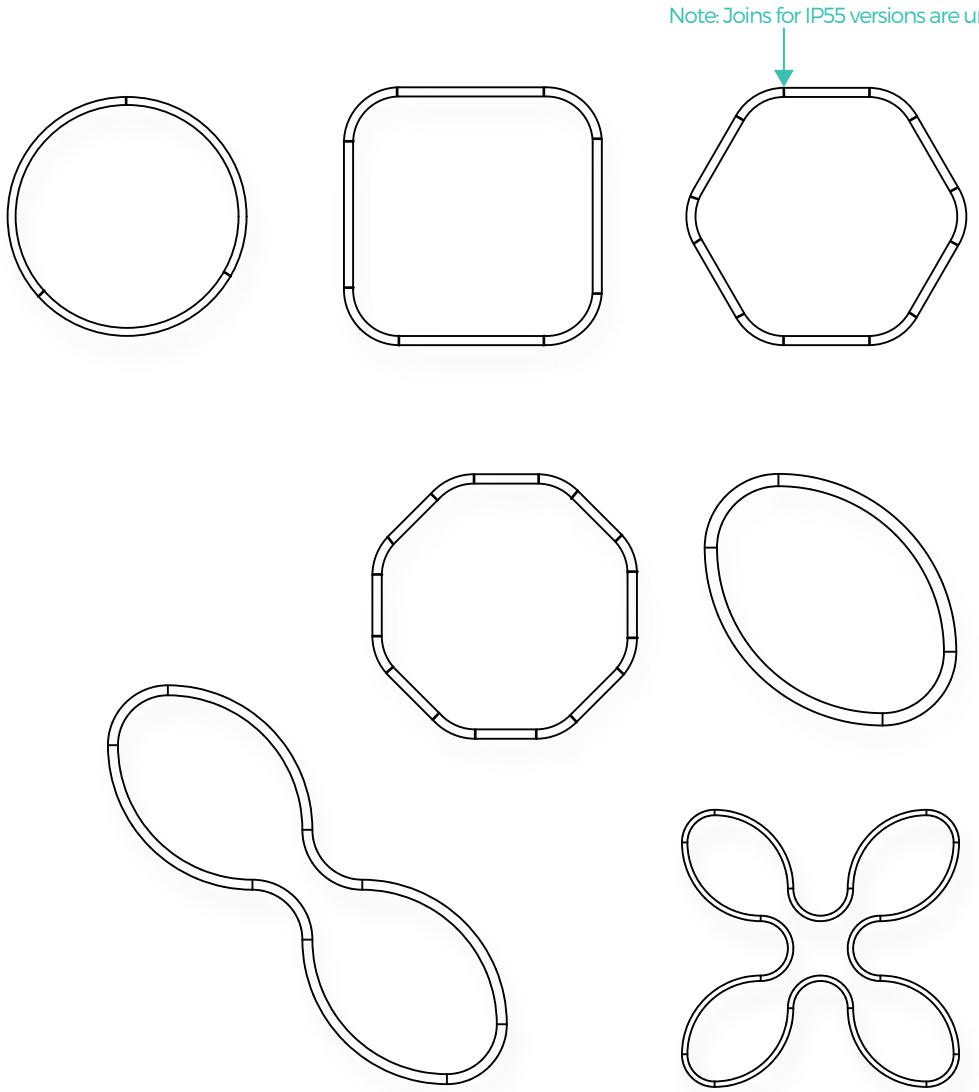

NOTE: All of the above examples have been designed using standard radii

XTA 2.0 LOOP Slot IP55

Install Template

Xero Loop profiles come with mounting templates that allow for easy installation.

The template should be assembled on the floor and the position in the room checked against the reflected ceiling plan then suspension positions should be laser transferred to the ceiling for accurate positioning before installing. Individual sections 'click' together to create an exact template of the actual luminaire.

Ease of installation is just another standard from the leader in linear lighting innovation.



Shape illustrated is an example only.
Templates are supplied for all individual designs and shapes